PLUNGIE MAX V2

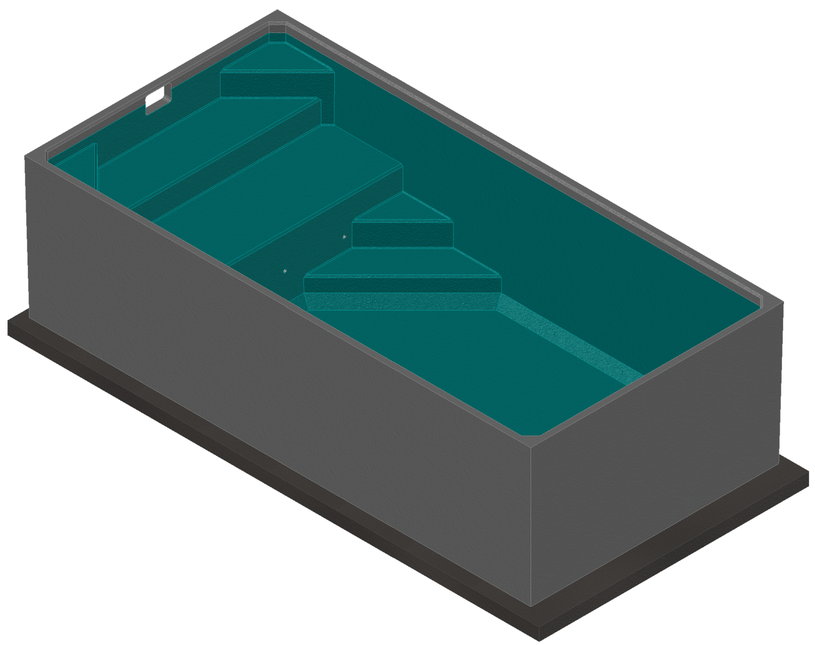

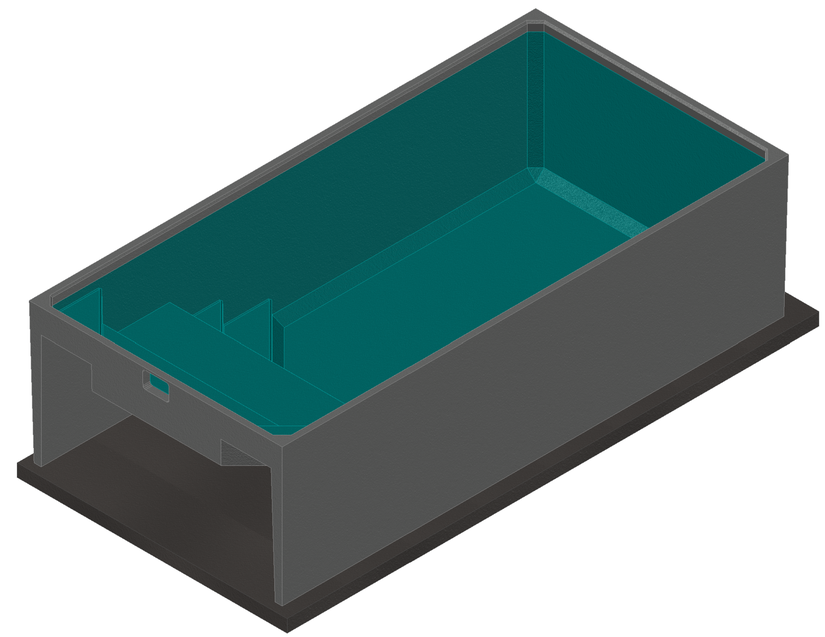

SHEET INDEX

NO.	DESCRIPTION
S00	COVER SHEET
S01	GENERAL NOTES
S02	SHELL REINFORCEMENT
S03	SHELL & ANCHOR DETAILS
S04	FOUNDATION OPTIONS
S05	PILING PLAN & DETAILS
S06	GROUNDING DETAILS

MANUFACTURER:

plungie®

PLUNGIE USA INC.
4400 TX STATE HIGHWAY 121, SUITE #300
LEWISVILLE, TX 75056
www.us.plungie.com

ENGINEERING CONSULTANT:

PoolCAD Engineering Group

1961 NORTHPOINT BLVD, SUITE 130
HIXSON, TN 37343
TEL: 423-843-9500
FAX: 423-843-9509

ENGINEER:

STEPHEN E. HUNT, P.E.
1961 NORTHPOINT BLVD, SUITE 130
HIXSON, TN 37343
423-843-9500

STAMP:

STEPHEN E. HUNT
REGISTERED ENGINEER
No. 105936
STATE OF TENNESSEE

REV.	DESCRIPTION:	BY:	DATE:
0	CONSTRUCTION READY	JAF	03/15/23

PROJECT:

PLUNGIE MAX V2
10'-0" x 20'-0" x 5'-6½"
PRECAST CONCRETE
EXCERSIZE/SWIM SPA

CERTIFICATIONS:

ICC ES — FILE #: PMG-1629

CLASSIFIED UL — FILE #: E532606

CLIENT:

PLUNGIE USA

TITLE:

COVER SHEET

SCALE:

AS INDICATED ON SHEET

SHEET SIZE:	DATE:	DRAWN:	CHECKED:
24"x36"	03/01/23	TDD	SEH

PROJECT NO:	SHEET NO:	REVISION:
2212.01	S00	0

GENERAL NOTES

JURISDICTION APPROVALS AND PERMITTING

1. POOLCAD HAS DESIGNED AND CERTIFIED THE PRECAST CONCRETE POOL SHELLS DETAILED IN THESE DRAWINGS FOR FABRICATION IN A CONTROLLED FACTORY ENVIRONMENT.
2. POOLCAD IS NOT RESPONSIBLE FOR THE SITE SPECIFIC INSTALLATION OF THE POOL SHELLS.
3. FOR SITES THAT DO NOT ADHERE TO THE STANDARD CONDITIONS AND REQUIREMENTS DETAILED IN THESE DRAWINGS, IT IS THE RESPONSIBILITY OF THE CUSTOMER TO ENGAGE A CERTIFIED STRUCTURAL ENGINEER TO ASSESS THE SITE AND DEVELOP AN APPROPRIATE FOUNDATION SOLUTION.
4. THE CUSTOMER IS RESPONSIBLE FOR PROVIDING THE REQUIRED JURISDICTION APPROVALS AND PERMITS (OR LOCAL STATE EQUIVALENT) FOR THE PRECAST SHELL AND ENSURING THAT THE INSTALLATION COMPLIES WITH THE REQUIREMENTS DETAILED ON THE STRUCTURAL DRAWINGS.

APPLICABLE CODES

ALL MATERIALS AND WORKMANSHIP SHALL BE IN ACCORDANCE WITH THE FOLLOWING CODES EXCEPT WHERE VARIED BY THE DRAWINGS:

TENNESSEE STATE CODE ON BASED FROM THE FOLLOWING
- 2012 INTERNATIONAL BUILDING CODE
- 2012 INTERNATIONAL FIRE CODE
- 2012 INTERNATIONAL PLUMBING CODE
- 2012 INTERNATIONAL EXISTING BUILDING CODE
- 2012 INTERNATIONAL FUEL GAS CODE
- 2012 INTERNATIONAL MECHANICAL CODE
- 2012 INTERNATIONAL PROPERTY MAINTENANCE CODE
- 2009 INTERNATIONAL ENERGY CONSERVATION CODE
- 2018 INTERNATIONAL RESIDENTIAL CODE

THE CODES, NOTES AND PROCEDURES REFERRED TO AND SHOWN ON THESE DRAWINGS APPLY AT THE TIME OF THE DRAWING ISSUE AND FOR A MAXIMUM PERIOD OF 5 YEARS THEREAFTER. WITH TIME, THE CODES, NOTES AND PROCEDURES MAY BE SUBJECT TO ALTERATIONS AND MODIFICATIONS TO THESE DRAWINGS MAY BE REQUIRED.

DESIGN CRITERIA

1. DEAD LOADS
   A. CONCRETE DEAD LOAD..... 145 PCF
2. LIVE LOADS
   A. SYSTEM WATER LOAD..... 62.4 PCF
3. SNOW LOADS
   A. GROUND SNOW LOAD..... N/A
   B. SNOW EXPOSURE FACTOR..... 1.0
   C. SNOW LOAD IMPORTANCE FACTOR..... 1.0
   D. SNOW DRIFT..... PER CODE
4. WIND LOADS
   A. METHODOLOGY..... OPEN STRUCTURE
   B. ULTIMATE WIND SPEED..... UP TO 140 MPH

   WIND EXPOSURE FACTOR..... C
   C. DIRECTIONALITY/OTHER FACTORS..... Kd=0.85, G=0.85, Kz=0.85, Kzt=1.0
   D. WIND DESIGN HEIGHT..... 10 FEET
   E. DESIGN WIND PRESSURE..... 24 PSF

   IN AREAS WHERE WIND LOADS ARE HIGHER THAN SPECIFIED ABOVE, THE POOL MUST BE INSTALLED IN GROUND.
5. SEISMIC LOADS..... DOES NOT GOVERN (MAX SDC = C)
6. THE DESIGN REQUIRES THAT BUOYANT FORCES FROM GROUND WATER PRESSURE TO THE POOL WALLS AND FLOOR SLAB BE RELIEVED BY INSTALLATION OF A HYDROSTATIC VALVE. REFER TO DRAWINGS FOR DETAILS.
7. THE POOL SHALL ONLY BE EMPTIED IN AN APPROVED MANNER UNDER PROPERLY CONTROLLED CONDITIONS. OWNER TO CONDUCT REGULAR (YEARLY) MAINTENANCE CHECKS OF THE DRAIN VALVE TO ENSURE THAT MAIN DRAIN VALVE DOES NOT BECOME BLOCKED. IT IS CRUCIAL THAT THE OWNER CHECKS THAT THE DRAIN VALVE IS NOT BLOCKED AND IS FULLY FUNCTIONING PRIOR TO EMPTYING POOL.
8. OWNER TO ENSURE POOL REMAINS FULL IN THE EVENT OF FLOODING OR GENERAL RISE IN WATER TABLE LEVEL.
9. THE DESIGN ASSUMES THAT THE SITE IS RELATIVELY FLAT WITH GROUND SLOPING AWAY FROM POOL.

CONSTRUCTION AND TEMPORARY WORKS

1. THE POOL INSTALLER SHALL BE RESPONSIBLE FOR MAINTAINING STABILITY OF THE STRUCTURE UNTIL COMPLETION OF CONSTRUCTION AND SHALL ENSURE THAT NO PART OF THE STRUCTURE IS OVER STRESSED BY EXCESSIVE CONSTRUCTION LOADING.
2. TEMPORARY WORKS ARE THE RESPONSIBILITY OF THE POOL INSTALLER, THESE INCLUDE SUCH ITEMS AS TEMPORARY SHORING & RETENTION, MAINTAINING TEMPORARY STABILITY OF THE STRUCTURE, FORMWORK, CRANE BASE, TEMPORARY WORKING PLATFORMS AND GROUND IMPROVEMENT TO SUPPORT CONSTRUCTION PLANT.
3. STRUCTURAL DRAWINGS TO BE READ IN CONJUNCTION WITH ALL POOL INSTALLER AND OTHER CONSULTANTS DRAWINGS AND SPECIFICATIONS.
4. POOL INSTALLER TO ENSURE ANY FOOTING OR ADJOINING STRUCTURES ARE NOT UNDERMINED BY THE POOL EXCAVATION WORKS. ANY UNDERPINNING WORKS REQUIRED SHALL BE SUBJECT TO DESIGN AND CERTIFICATION BY AN INDEPENDENT CERTIFIED STRUCTURAL ENGINEER. UNDERPINNING WORKS, IF REQUIRED, ARE TO BE COMPLETED PRIOR TO FORMING THE POOL EXCAVATION.
5. THE CUSTOMER AND POOL INSTALLER ARE TO MAKE THEMSELVES AWARE OF ANY IN-GROUND SERVICES AND AVOID ANY CLASHES WITH THE POOL EXCAVATION ZONE PRIOR TO EXCAVATION.

GENERAL

1. THE DETAILS ON THESE DRAWING APPLY ONLY FOR THE STANDARD POOL SHELL SIZES NOTED ON THE DRAWINGS.
2. THE DETAILS ON THESE DRAWINGS ARE PROVIDED IN GOOD FAITH THAT A GEOTECHNICAL INVESTIGATION IS CARRIED OUT PRIOR TO INSTALLATION OF THE POOL AND THE GEOTECHNICAL RECOMMENDATIONS AND REPORT ARE PROVIDED BY THE CUSTOMER TO AN INDEPENDENT CERTIFIED STRUCTURAL ENGINEER FOR VERIFICATION.
3. POOLCAD CARRIES NO RESPONSIBILITY FOR POOL SHELLS NOT INSTALLED IN ACCORDANCE WITH THE GEOTECHNICAL RECOMMENDATIONS AND DESIGN ASSUMPTIONS OUTLINED IN THESE DRAWINGS.

PLUMBING AND DRAINAGE

1. ALL PLUMBING AND DRAINAGE MUST COMPLY WITH THE LOCAL AUTHORITY
2. PLUMBING AND UNDER SLAB DRAINAGE UNDER THE POOL SHOULD BE AVOIDED.
3. SURFACE WATER RUNOFF SHOULD BE DRAINED AWAY FROM THE POOL AT A 1:50 SLOPE AND BE DIRECTED TO THE STORMWATER SYSTEM TO PREVENT PONDING OF WATER AGAINST OR NEAR THE SURFACE OF THE POOL SHELL.

SALTWATER POOL

1. IF SALT CHLORINATOR USED, CONCENTRATION TO BE KEPT BELOW 5,000 P.P.M.

GEOTECHNICAL BRIEF

A NEW GEOTECHNICAL REPORT IS REQUIRED UNLESS THE HOMEOWNER HAS AN EXISTING GEOTECHNICAL REPORT OF THE PROPERTY WITH THE BORING SAMPLES TAKEN BEING WITHIN 100 FEET OF THE NEW POOL LOCATION AND THE REPORT HAS BEEN DATED TEN YEARS MAXIMUM. PLEASE CONSULT AN ENGINEER FOR A NEW FOUNDATION DESIGN IF THE RECOMMENDED PILE DESIGN, IN THE GEOTECHNICAL REPORT, IS MORE STRINGENT THAN THE PILE DESIGN PROVIDED BY PLUNGIE POOL DRAWINGS.

GENERAL REQUIREMENTS

1. THE GEOTECHNICAL SITE CONDITIONS ARE A CRUCIAL COMPONENT IN THE DESIGN AND INSTALLATION OF THE POOL SHELL. IT IS THE RESPONSIBILITY OF THE CUSTOMER TO CONFIRM THE GEOTECHNICAL PARAMETERS FOR EACH SITE. REFER TO "FOUNDATIONS" NOTES FOR MORE INFORMATION.
2. THE CUSTOMER SHALL ENGAGE A CERTIFIED GEOTECHNICAL ENGINEER TO UNDERTAKE A SITE INVESTIGATION TO CONFIRM RELEVANT SOIL PARAMETERS, PROVIDE SITE CLASSIFICATION AND SOIL CLASSIFICATION, AND PROVIDE SITE SPECIFIC ADVICE TO ENABLE THE SELECTION OF THE APPROPRIATE STANDARD INSTALLATION DETAILS.
3. GEOTECHNICAL SITE INVESTIGATION IS TO BE IN ACCORDANCE WITH IBC SECTION 1803.5 AND SHALL INCLUDE ITEMS AS LISTED IN SECTION 1803.6.
4. DESCRIPTION OF SOILS IS TO BE IN ACCORDANCE WITH THE UNIFIED SOIL CLASSIFICATION SYSTEM (USCS).
5. THE FIELD WORK AND TESTING SHOULD BE CARRIED OUT UNDER THE SUPERVISION OF A CERTIFIED GEOTECHNICAL ENGINEER.
6. THE GEOTECHNICAL CONSULTANT IS TO MAKE THEMSELVES AWARE OF ALL SERVICES AND EXISTING CONDITIONS IN THE AREA OF INVESTIGATION AND IS RESPONSIBLE FOR SAFETY OF PERSONNEL AND OTHERS ON SITE DURING SITE INVESTIGATION ACTIVITIES (I.E. DIAL 811 BEFORE YOU DIG)

SCOPE

1. FOLLOWING SCOPE REQUIREMENTS SHALL BE PER IBC 1803.6.
2. TWO BOREHOLES (MIN. 15 FT DEPTH) AT THE PROPOSED LOCATION OF THE POOL WITH LOGS RECORDING THE SUBSURFACE STRATA, GENERAL OBSERVATIONS, AND PRESENCE OF GROUNDWATER.
3. COLLECTION OF ADEQUATE SAMPLES FROM THE BOREHOLES TO ALLOW FOR LABORATORY TESTING TO DETERMINE RELEVANT MATERIAL PROPERTIES.
4. DCPS ADJACENT TO THE BOREHOLES TO CORRELATE OBSERVATIONS ON CONSISTENCY AND DENSITY OF SOILS ENCOUNTERED.
5. COMMENTARY ON GENERAL SITE CONDITIONS AND CONSTRAINTS THAT MAY IMPACT THE PROPOSED SET OUT OF THE POOL. (E.G. SLOPES, EXISTING FOUNDATIONS, TREES, RETAINING WALLS, ETC.)
6. PREDICTIONS OF CHARACTERISTIC SURFACE MOVEMENT, SOIL SUCTION ZONE, TREE EFFECTS, AND DESIGNATION OF A SITE CLASSIFICATION BASED ON SOIL CLASSIFICATION.
7. COMMENTARY ON SUBSURFACE CONDITIONS INCLUDING DEPTH OF UNCONTROLLED FILL MATERIALS, DEPTH TO SUITABLE BEARING STRATA AND EFFECTS OF GROUNDWATER (IF ENCOUNTERED).
8. RECOMMENDATIONS FOR DEWATERING OF EXCAVATIONS (IF REQUIRED).
9. RECOMMENDATIONS FOR EARTHWORKS INCLUDING EXCAVATABILITY, MAXIMUM TEMPORARY AND PERMANENT BATTER SLOPES, FILL SPECIFICATION (INCLUDING MATERIAL COMPOSITION, COMPACTION, MOISTURE CONTENT, ETC.), POSSIBILITY OF REUSE OF EXCAVATED MATERIALS AS FILL, SUBGRADE PREPARATION (INCLUDING COMPACTION PROCEDURES AND LIMITATIONS, SOIL REPLACEMENT - IF REQUIRED).
10. RECOMMENDATIONS FOR MAINTENANCE OF TREES, DRAINAGE, ETC.
11. RECOMMENDATIONS FOR APPROPRIATE FOUNDATIONS AND RELEVANT DESIGN PARAMETERS FOR SHALLOW OR DEEP FOOTINGS (IF REQUIRED DUE TO PRESENCE OF HIGHLY EXPANSIVE SOILS. NOTE THAT CL,ML,MH, AND CH SITES REQUIRE PILING OPTION AS SHOWN.
12. POTENTIAL PRESENCE OF ACID SULPHATE SOILS (IF REQUIRED).

DELIVERABLES

1. PRIOR TO CONSTRUCTION, THE GEOTECHNICAL CONSULTANT IS REQUIRED TO PROVIDE THE FOLLOWING DELIVERABLES PER IBC 1803.6:
   A. REPORT (INCLUDING PHOTOS, AND A SITE PLAN INDICATING INVESTIGATION LOCATIONS) SUMMARIZING FINDINGS AND MAKING RELEVANT RECOMMENDATIONS AS DESCRIBED IN THE SCOPE.
   B. BORE LOGS.
   C. LAB TEST REPORTS

FOUNDATION AND SITE CONDITIONS

FOUNDATIONS

1. FOOTINGS AND FOUNDATIONS SHALL BE IN ACCORDANCE WITH LOCAL BUILDING CODES. FOOTING HAVE BEEN DESIGNED WITH A SOIL BEARING (DESIGN MAXIMUM) OF 2000 PSF. BEARING CAPACITY TO BE VERIFIED WITH GEOTECHNICAL REPORT.
2. FOUNDATION PLAN ONLY CONVEYS STRUCTURAL INFORMATION. DO NOT SCALE FOOTING DIMENSIONS AND LOCATIONS FROM THE FOUNDATION PLAN. IF FOOTING SIZE OR LOCATION IS NOT DETERMINED ON PLAN THEN CONTACT THE STRUCTURAL ENGINEER.
3. UNLESS OTHERWISE NOTED ON DRAWINGS, MINIMUM CONCRETE COVER FOR REINFORCING SHALL BE 3" IN FOOTINGS. IN ALL CONTINUOUS FOOTINGS PROVIDE #4 @ 48" O.C. OR ROD CHAIRS, PROVIDE CONTINUITY OF REINFORCING AT INTERSECTIONS OF PERPENDICULAR CONCRETE ELEMENTS BY INSTALLING CORNER BARS, MINIMUM OF 40 BAR DIAMETERS INTO EACH ELEMENT. SPLICES IN REINFORCING, WHERE PERMITTED, SHALL BE 48 BAR DIAMETERS
4. UNLESS SPECIFICALLY NOTED AS "CANTILEVERED" ON PLAN OR DETAILS, WALLS RETAINING EARTH MUST BE SHORED CONTINUALLY PRIOR TO COMPLETION OF STRUCTURAL SLABS ON GRADES AND/OR ELEVATED SLABS HAVE BEEN PLACED. THE CONTRACTOR SHALL BE RESPONSIBLE FOR PROVIDING THE DESIGN, ADEQUACY, SAFETY, AND STABILITY OF TEMPORARY ERECTION BRACING AND SHORING.
5. BACKFILL AGAINST SHELL WALLS SHALL BE DEPOSITED EVENLY IN LIFTS UP TO12" AGAINST THE WALL UNTIL THE LOWER FINAL GRADE IS REACHED. CONTRACTOR SHALL PROVIDE ADEQUATE BRACING OR SHORING FOR ALL WORK DURING THE CONSTRUCTION PERIOD. BACKFILL SHALL NOT BE PLACED AGAINST WALLS UNTIL THE WALLS HAVE ACHIEVED 100% OF SPECIFIED DESIGN STRENGTH.
6. TOP OF FOOTING ELEVATIONS PROVIDED ON DRAWINGS ARE FOR PURPOSES OF CONTRACT & SHALL BE ADJUSTED, AS REQUIRED, AT TIME OF EXCAVATION TO BEAR ON PROPERLY PREPARED SUPPORT SUBGRADE OR TO ADJUST FOOTING ELEVATIONS TO AVOID INFLUENCE BETWEEN FOUNDATIONS & BURIED PLUMBING. DO NOT EMBED PIPING WITHIN OR PASS PIPING VERTICALLY OR HORIZONTALLY THROUGH ISOLATED FOOTINGS.
7. FILL TO BE COMPACTED TO 95% OF MODIFIED PROCTOR MAXIMUM DENSITY AS DETERMINED BY ASTM D-1557. PLACE FILL IN LAYERS OF 8" THICK.
8. TESTS FOR DEGREE OF COMPACTION SHALL BE DETERMINED BY THE ASTM D-1556 OR ASTM D-2922 TEST METHODS. IF LESS THAN 95 (U.N.O. IN SOILS REPORT) PERCENT IS INDICATED, ADDITIONAL COMPACTION EFFORT SHALL BE MADE WITH ADJUSTMENT OF THE MOISTURE CONTENT AS REQUIRED COMPACTION IS OBTAINED.

EXCAVATIONS AND SURFACE PREPARATION

1. ALL UNCONTROLLED FILL, TOPSOIL, AND ORGANIC MATTER UNDER THE POOL FOOTPRINT IS TO BE REMOVED AND DISPOSED OF APPROPRIATELY.
2. FOUNDATION EXCAVATIONS TO BE MAINTAINED IN A FIRM DRY CONDITION.
3. EXCAVATION SHALL NOT BE PERFORMED UNDER THE LINE OF INFLUENCE EXTENDING FROM EXISTING FOOTINGS (FOR BUILDINGS, WALLS, FENCES, ETC.). REFER GEOTECHNICAL ENGINEER FOR ADVICE.
4. IF OVER EXCAVATION IS REQUIRED TO FIND UNDISTURBED NATURAL GROUND WHICH ACHIEVES THE MINIMUM ALLOWABLE BEARING CAPACITY UNDER THE POOL FOUNDATION, UNLESS OTHERWISE SPECIFIED BY THE GEOTECHNICAL ENGINEER, STRUCTURAL FILL IS TO BE NON-EXPANSIVE SOIL COMPACTED TO 95% MODIFIED PROCTOR DENSITY. REFER TO GEOTECHNICAL REPORT FOR FILL MATERIAL AND MAXIMUM ALLOWABLE THICKNESS FOR EACH LIFT PER IBC 1803.5.8.

BACKFILL

1. BACKFILL AROUND INGROUND POOLS IS TO BE LIGHTLY COMPACTED, GRANULAR, NON-EXPANSIVE, NOMINAL AASHTO #57 STONE. THE MINIMUM WIDTH OF THE GRANULAR BACKFILL ZONE IS 8". THE MAXIMUM ALLOWABLE BATTER ANGLE (MEASURED FROM HORIZONTAL PLANE) FOR EXCAVATIONS IS DEPENDANT ON THE CHARACTERISTIC SURFACE MOVEMENT (YS) AND CORRELATING CLASSIFICATION OF THE SITE TO CONTROL LATERAL EARTH PRESSURES ON THE POOL SHELL WALLS FROM SWELLING INSITU SOILS.
2. DO NOT OVER COMPACT AS THIS WILL INDUCE EXCESSIVE LATERAL EARTH PRESSURES ON THE WALLS OF THE POOL SHELL. WACKER PACKERS OR EQUIVALENT WALK BEHIND UNITS ARE APPROPRIATE FOR BACKFILL COMPACTION. REFER TO BACKFILL SCHEDULE FOR MAXIMUM ALLOWABLE BATTER ANGLES.

POOL DECK

1. THE DESIGN OF THE POOL SHELL ASSUMES POOL DECKING IS INSTALLED AROUND THE PERIMETER OF THE POOL AT SURFACE LEVEL TO REDUCE MOISTURE VARIATIONS IN THE SURROUNDING SOILS. REFER TO DRAWING "FOOTING OPTIONS" FOR DETAILS WHICH ARE DEPENDANT ON THE SITE CLASSIFICATION.

   THE IMPERVIOUS SURROUND TO THE PERIMETER OF THE POOL COULD TAKE THE FOLLOWING FORMS:
   - 8" THICK CLAY (BENTONITE CAPPING)
   - HDPE MEMBRANE WITH SEALED JOINTS (BUILDERS PLASTIC)
   - CONCRETE APRON

   THE POOL DECK SHALL NOT INDUCE ANY ADDITIONAL BENDING STRESSES IN THE POOL SHELL WALLS.

   IF THE POOL DECK IS A CONCRETE APRON, A COMMERCIAL GRADE WATERPROOF FLEXIBLE ELASTIC SEALANT IS TO BE USED TO SEAL THE JOINT BETWEEN THE SURROUND AND THE POOL SHELL AND JOINTS IN THE CONCRETE APRON.

   THE DECK MUST BE ADEQUATELY GRADED WITH A MIN 1 IN 50 FALL AWAY FROM THE POOL TO PREVENT PONDING AND WATER SEEPING THROUGH THE JOINT BETWEEN THE SURROUND AND THE POOL SHELL.

   IF AN ALTERNATIVE POOL DECK DETAIL IS PROPOSED, IT WILL NEED TO BE EVALUATED BY A CERTIFIED STRUCTURAL ENGINEER.

PRECAST LIFTING AND INSTALLATION

1. PRIOR TO CONSTRUCTION, REFER TO IBC 1803.6 FOR LIST OF DELIVERABLES.
2. PRECAST SHELL TO BE CAST WITH MINIMUM S50 CONCRETE. SEE CONCRETE NOTES.
3. SEE SHELL DRAWINGS AND DETAILS FOR MINIMUM IN-SERVICE LOAD REINFORCEMENT. ALL DETAILS SHOWN ARE FOR WHEN PRECAST SHELL IS IN PLACE.
4. LIFTING INSERTS HAVE BEEN DESIGNED TO THE LOADS AS SHOWN ON THE DRAWINGS. ANY ADDITIONAL LIFTING STRESSES MUST BE CHECKED BY THE LIFTING CONTRACTOR PRIOR TO LIFTING.
5. LIFT PRECAST SHELL WITH SPREADER BAR AND PULLEYS AND LIFTING ROPES TO ENSURE EVEN LIFT & LOADING TO FERRULES. THE LIFTING CONTRACTOR MUST CHECK THE CAPACITY OF THE CAST IN FERRULES AGAINST THEIR TYPE OF LIFTING EQUIPMENT AND THE STRENGTH OF THE CONCRETE AT THE TIME OF LIFTING.
6. LIFTING LOADS ON PRECAST SHELL MUST ADHERE TO THE FOLLOWING:
   A. REMOVAL OF FORM AND LIFTING/ROTATING - FERRULES TO TAKE SHEAR LOADS ONLY. ROTATING OF PRECAST SHELL TO BE CARRIED OUT IN A SAFE AND CONTROLLED MANNER TO LIMIT WORKING SHEAR LOADS ON FERRULES AS SHOWN ON DRAWINGS.
   B. LIFTING/ROTATING: ROTATING SHELL BY MEANS OF A 'FLIPPER' IS TO BE CARRIED OUT IN A SAFE AND CONTROLLED MANNER.
   C. DURING INSTALLATION - FERRULES TO TAKE WORKING LOADS AS SHOWN ON DRAWINGS.
6. LIFTING CONTRACTOR TO ALLOW CONTROL TESTING OF CONCRETE SAMPLES TO CONFIRM MINIMUM CONCRETE STRENGTH AT TIME OF REMOVAL OF FORMS, LIFTING ROTATING, AND INSTALLATION. SEE CORRESPONDING CONCRETE PSI VALUES FOR THESE FACTORS IN STRENGTH TABLE BELOW:
   A. REMOVAL OF FORMS AND LIFTING/ROTATING OF PRECAST SHELL
   B. INSTALLATION OF PRECAST SHELL

   SCHEDULE OF LIFTING CONCRETE STRENGTH

POOL MODEL	'A' FACTOR	'B' FACTOR
12ft x 7ft	4000 PSI	7252 PSI
15ft x 8ft	4000 PSI	7252 PSI
20ft x 10ft	4000 PSI	7252 PSI
11.5ft DIAMETER	4000 PSI	7252 PSI

7. LIFTING CONTRACTOR TO ENSURE PRECAST SHELL IS STABLE AND SECURED PRIOR TO INSTALLATION.

CONCRETE

1. CONCRETE MIXTURES FOR POOL SHELL SHALL BE DESIGNED TO REACH A COMPRESSIVE STRENGTH OF 8,000 PSI IN 28 DAYS U.N.O. ALL MIXING, TRANSPORTING, PLACING, & CURING OF CONCRETE SHALL BE IN ACCORDANCE WITH ACI 318. NO ADMIXTURES ARE TO BE USED WITHOUT THE WRITTEN APPROVAL OF THE ABOVE-SIGNED ENGINEER. CONCRETE SHALL BE TYPE 1L PORTLAND CEMENT MEETING THE REQUIREMENTS OF ASTM C150. AGGREGATES TO MEET ASTM C33 RIVER GRAVEL ⅜" IN SIZE. POTABLE WATER SHALL BE USED.
2. CONCRETE FOOTERS ARE TO INCLUDE STEEL REINFORCEMENT AS LISTED IN THE FOOTER DESIGN SCHEDULE NOTES.
3. MINIMUM REBAR COVER FOR CONCRETE FOOTINGS IS 3" FOR CONCRETE NOT CAST AGAINST AND PERMANENTLY EXPOSED TO EARTH.
4. PROTECT CONCRETE FROM DAMAGE AND REDUCED STRENGTH CAUSED BY FROST, FREEZING ACTIONS AND LOW TEMPERATURES IN COMPLIANCE WITH ACI 306.
5. PROTECT CONCRETE FROM DAMAGE AND REDUCED STRENGTH CAUSED BY HIGH TEMPERATURES IN COMPLIANCE WITH ACI 305. UNIFORMLY COOL WATER AND AGGREGATES BEFORE MIXING TO OBTAIN A CONCRETE MIXTURE TEMPERATURE OF NOT GREATER THAN 90 DEGREES FAHRENHEIT AT POINT OF PLACEMENT.
6. ALL OPENINGS IN CONCRETE FOOTINGS OR SHELL SHALL BE LOCATED, SIZED, AND REINFORCED. ANY ALTERATIONS REQUIRE APPROVAL OF THE STRUCTURAL ENGINEER.
7. CONCRETE SPECIFICATION (PRECAST SHELL)
   SLUMP FLOW 28 ± 4 IN
   MAXIMUM AGGREGATE ⅜"
   CEMENT TYPE '1L' PORTLAND
   ALTERNATIVE CONCRETE SPECIFICATIONS FOR THE PRECAST SHELL ARE TO BE SUBMITTED TO THE ENGINEER FOR REVIEW AND QUALITY CONTROL TESTING CARRIED OUT TO ENSURE THE PROPOSED MIX MEETS THE PERFORMANCE CRITERIA.

   CONCRETE SPECIFICATION (FOUNDATION)
   SLUMP FLOW ± 3½ IN
   MAXIMUM AGGREGATE ½ IN
   CEMENT TYPE '1L' PORTLAND
   PROJECT CONTROL TESTING SHALL BE CARRIED OUT IN ACCORDANCE WITH ACI 318 AND THE SPECIFICATION TEST REPORTS TO BE SUBMITTED TO THE STRUCTURAL ENGINEER FOR APPROVAL.
8. CONCRETE STRENGTH & CLEAR COVER TO BE AS FOLLOWS

ELEMENT	CONCRETE GRADE	COVER (in)		
		BOTTOM	TOP	SIDES
PRECAST SHELL	8000	1.375	1.375	1.375
FOUNDATION	3000	3	2	3
APRON SLAB (IF REQ.)	4000	3	2	3

9. CURE ALL CONCRETE SURFACES IN ACCORDANCE WITH ACI 318.
10. CURING OF ALL CONCRETE FOR THE PRECAST SHELL IS TO BE ACHIEVED BY KEEPING SURFACES CONTINUOUSLY WET FOR A PERIOD OF 3 DAYS AND PREVENTION OF LOSS OF MOISTURE FOR A TOTAL OF 7 DAYS FOLLOWED BY A GRADUAL DRYING OUT. CURING COMPOUNDS ARE NOT TO BE USED ON THE PRECAST SHELL AS THEY MAY INHIBIT THE BOND OF SUBSEQUENT COATINGS.
11. SPRAYED MEMBRANE FORMING CURING COMPOUNDS MAY BE APPLIED TO THE SURFACE OF THE FOUNDATION TO PREVENT MOISTURE LOSS. CURING COMPOUNDS MUST COMPLY WITH ACI 318 AND ARE TO BE APPLIED IN ACCORDANCE WITH THE MANUFACTURER'S SPECIFICATIONS.
12. IF USING CURING COMPOUNDS FOR THE FOUNDATION, THE EMPTY PRECAST SHELL CAN BE POSITIONED ON THE FOUNDATION AFTER THE FOUNDATION HAS CURED FOR AT LEAST 24 HOURS PROVIDED THE FOUNDATION HAS ACHIEVED A MINIMUM COMPRESSIVE STRENGTH OF 2500 PSI. IF CURING THE FOUNDATION BY MOIST CURING, THE PRECAST SHELL CAN BE POSITIONED ON THE FOUNDATION AFTER A PERIOD OF 7 DAYS.
13. PRIOR TO FILLING THE PRECAST SHELL WITH WATER, THE FOUNDATION MUST ACHIEVE A MINIMUM COMPRESSIVE STRENGTH OF 3000 PSI AND HAVE BEEN ALLOWED TO CURE USING CURING COMPOUNDS OR MOIST CURING FOR AT LEAST 7 DAYS OR 10 DAYS RESPECTIVELY.
14. RETAIN FORMWORK FOR CONCRETE FOUNDATION FOR A MINIMUM OF 24 HRS. RETAINING FORMWORK FOR LONGER WILL ASSIST WITH CURING OF THE FOUNDATION.
15. ALL RE-ENTRANT CORNERS AND PENETRATIONS IN PRECAST SHELL LARGER THAN ⅜" DIAMETER ARE TO HAVE TRIMMER BARS PLACED AT CORNERS. TRIMMER BARS SHALL BE (2) ⅜" X 20" LONG AT 2" CENTERS UNLESS NOTED OTHERWISE.
16. ALL HOOKS AND BENDS TO BE IN ACCORDANCE WITH ACI 318. REINFORCING SHALL BE DEFORMED STEEL REBAR CONFORMING TO ASTM A615, GRADE 60. SPLICES TO BE CONTACT LAP SPLICES.
    UNLESS NOTED OTHERWISE ALL LAPS IN POOL SHELL TO BE:

BAR SIZE	LAP (in.)
#3	18

17. CONDUITS, VALVES, PENETRATIONS, ETC. SHALL ONLY BE FORMED WHEN CASTING THE SHELL (I.E. SITE FORMED PENETRATIONS ARE NOT PERMITTED) AND ARRANGEMENT MUST ADHERE TO PLANS, SECTIONS, AND DETAILS FOR EACH POOL SHELL MODEL.
18. ALL CONCRETE FOR POOL SHELL TO BE VIBRATED DURING PLACEMENT.
19. IT IS CRITICAL TO CONSTRUCT POOL SHELL FLOOR AND WALLS WITH CORRECT COVER TO REINFORCEMENT. REINFORCEMENT SHALL HAVE MINIMAL TOLERANCE AND ACCURATE SETOUT IS TO BE CONFIRMED BY SURVEY PRIOR TO CASTING.
20. REINFORCEMENT SHALL BE ACCURATELY BENT AROUND CURVATURES IN THE POOL PROFILE SHOWN ON THE DRAWINGS.

ABBREVIATIONS

ACI	AMERICAN CONCRETE INSTITUTE
ASCE	AMERICAN SOCIETY OF CIVIL ENGINEERS
BTM	BOTTOM FACE
CL	CENTER LINE
DIA	DIAMETER
ELEV	ELEVATION
FT	FEET
G	FUJITA SCALE
HDPE	HIGH DENSITY POLYETHYLENE
HORIZ	HORIZONTAL
IBC	INTERNATIONAL BUILDING CODE
IN	INCHES
Kd	DIRECTIONALITY FACTOR
Kz	VELOCITY PRESSURE EXPOSURE COEFFICIENT
Kzt	TOPOGRAPHIC WIND FACTOR
LG	LENGTH / LONG
MAX	MAXIMUM
MIN	MINIMUM
MDD	MAXIMUM DRY DENSITY
MPH	MILES PER HOUR
N/A	NOT APPLICABLE
NOM	NOMINAL
NTS	NOT TO SCALE
OC	ON CENTER
OPP	OPPOSITE
PCF	POUNDS PER CUBIC FOOT
P/N	PART NUMBER
PSF	POUNDS PER SQUARE FOOT
PSI	POUNDS PER SQUARE INCH
REINF	REINFORCING / REINFORCEMENT
REQ'D	REQUIRED
SDC	SEISMIC DESIGN CATEGORY
SIM	SIMILAR
SWL	SAFE WORKING LOAD
TYP	TYPICAL
T&B	TOP & BOTTOM
UNO	UNLESS NOTED OTHERWISE
VERT	VERTICAL

MANUFACTURER:
plungie®
PLUNGIE USA INC.
4400 TX STATE HIGHWAY 121, SUITE #300
LEWISVILLE, TX 75056
www.us.plungie.com

ENGINEERING CONSULTANT:
PoolCAD Engineering Group
1961 NORTHPOINT BLVD, SUITE 130
HIXSON, TN 37343
TEL: 423-843-9500
FAX: 423-843-9509

ENGINEER:
STEPHEN E. HUNT, P.E.
1961 NORTHPOINT BLVD, SUITE 130
HIXSON, TN 37343
423-843-9500

STAMP:

STEPHEN E. HUNT — REGISTERED ENGINEER — No. 126836 — STATE OF TENNESSEE

REV.	DESCRIPTION:	BY:	DATE:
0	CONSTRUCTION READY	JAF	03/15/23

PROJECT:
PLUNGIE MAX V2
10'-0" x 20'-0" x 5'-6½"
PRECAST CONCRETE
EXCERSIZE/SWIM SPA

CERTIFICATIONS:
ICC ES — FILE #: PMG-1629
CLASSIFIED UL — FILE #: E532606

CLIENT:
PLUNGIE USA

TITLE:
GENERAL NOTES

SCALE:
AS INDICATED ON SHEET

SHEET SIZE:	DATE:	DRAWN:	CHECKED:
24"x36"	03/01/23	TDD	SEH

PROJECT NO:	SHEET NO:	REVISION:
2212.01	S01	0

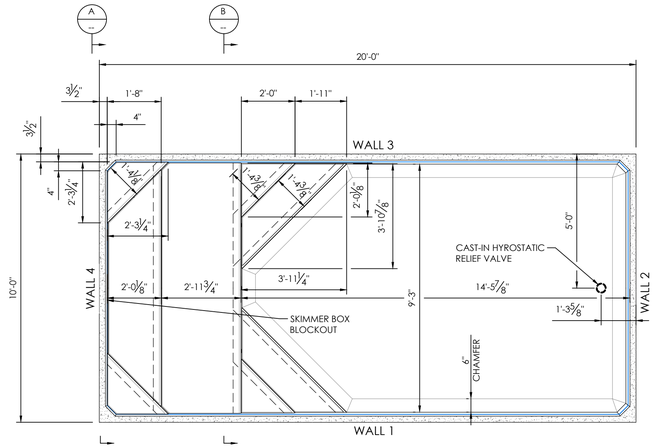

PLAN

SCALE: 3/8"=1'-0"

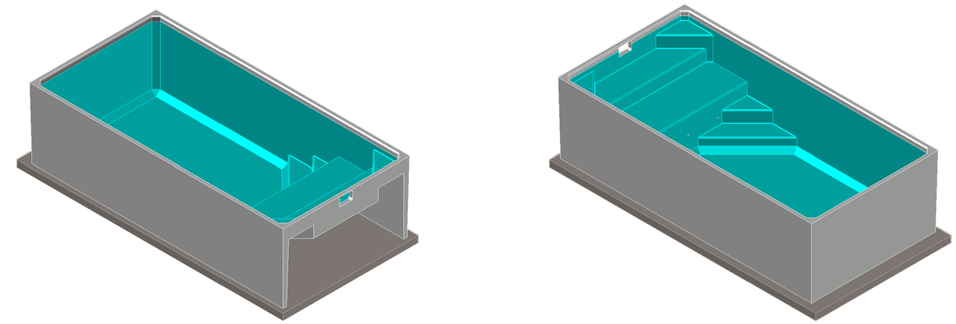

3D PERSPECTIVE VIEWS

LIFTING LUG INSERTS & APRON NOT SHOWN

NOTES:

1. WEIGHT OF SHELL = 26,000 POUNDS PRE-MANUFACTURED ESTIMATE.
2. SKIMMER BOX SETDOWN, CAST-IN CONDUITS, AND LIFTING LUG SETOUT TO BE CONFIRMED PRIOR TO POUR.
3. FERRULES TO BE CONAC COIL LIFTING SYSTEM FLARED THIN SLAB COIL INSERT OR APPROVED EQUIVALENT U.N.O.
4. FERRULES TO BE STAINLESS, GALVANIZED, OR ZINC PLATED STEEL GRADE A36 U.N.O.
5. FERRULES ON WALLS 2 AND 4 CAN BE UTILIZED FOR TIE-DOWN DURING TRANSPORTATION OF SHELL.
6. IT'S RECCOMMENDED THAT THE FERRULES TO BE GROUTED UP ONCE POOL IS INSTALLED.
7. FERRULE DESIGN CAPACITIES BASED ON CONTROLLED (LOW ACCELERATION) LIFTING, SELF WEIGHT OF SHELL AND MINIMUM CONCRETE STRENGTHS AS SPECIFIED. ONLY LIFT THE POOL SHELL (INCLUDING FINISHES) WHEN EMPTY.

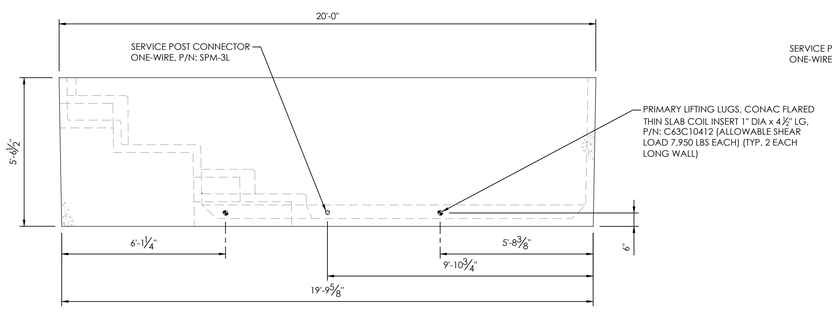

WALL 1 & 3 SHELL ELEVATION

WALL 3 OPP. HAND
SCALE: 3/8"=1'-0"

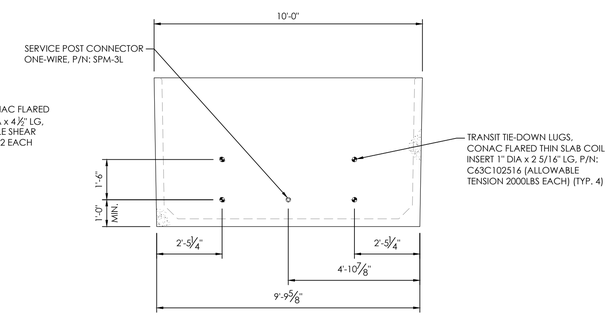

WALL 2 SHELL ELEVATION

SCALE: 3/8"=1'-0"

STENCIL 4" TALL BLOCK LETTERING IN SAFETY YELLOW OIL BASED PAINT. CENTER BETWEEN PRIMARY LIFTING LUGS AT THE BOTTOM OF WALLS 1 AND 3.

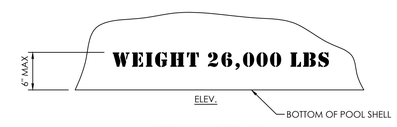

STENCIL DETAIL

N.T.S.

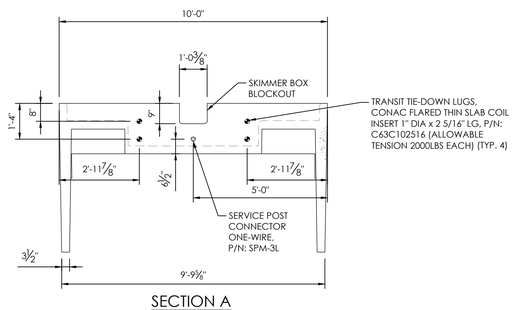

SECTION A

SCALE: 3/8"=1'-0"

MAX. 10 CAST-IN CONDUITS PER WALL. REFER TO THE CONCRETE SECTION OF GENERAL NOTES

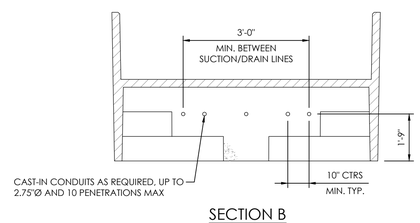

SECTION B

SCALE: 3/8"=1'-0"

Coil Lifting System

CONAC Concrete Lifting Solutions

Flared Thin Slab Coil Insert - Wing Nut Style

Coil is welded to two "L" profile closed loop wire struts.
Intended for handling thin slab concrete sections.

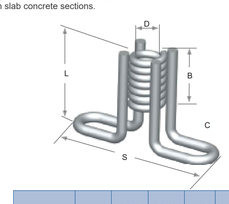

ITEM CODE	THREAD (D)	INSERT LENGTH (L)	BODY LENGTH (B)	WIRE DIA. (C)	SPREAD (S)	TENSION LOAD 5000 psi (LBS)	SHEAR LOAD 5000 psi (LBS)
C63C102516	1"	2-5/16"	2-1/16"	0.375"	5-1/4"	2,000	2,810
C63C10412	1"	4-1/2"	2-1/16"	0.375"	5-1/4"	4,750	7,950

Allowable loads are based on 1/2" setback from face of concrete. Safe working loads based on approximate 4:1 Safety Factor in 6,000 psi normal weight concrete. CONAC does not recommend using 1/2" inserts for lifting.

LIFTING LUG DETAIL

N.T.S.

MANUFACTURER:

plungie®

PLUNGIE USA INC.
4400 TX STATE HIGHWAY 121, SUITE #300
LEWISVILLE, TX 75056
www.us.plungie.com

ENGINEERING CONSULTANT:

PoolCAD Engineering Group

1961 NORTHPOINT BLVD, SUITE 130
HIXSON, TN 37343
TEL: 423-843-9500
FAX: 423-843-9509

ENGINEER:

STEPHEN E. HUNT, P.E.
1961 NORTHPOINT BLVD, SUITE 130
HIXSON, TN 37343
423-843-9500

STAMP:

STEPHEN E. HUNT REGISTERED ENGINEER 115.00 NATIONWIDE STATE OF TENNESSEE

REV.	DESCRIPTION:	BY:	DATE:
0	CONSTRUCTION READY	JAF	03/15/23

PROJECT:

PLUNGIE MAX V2
10'-0" x 20'-0" x 5'-6 1/2"
PRECAST CONCRETE
EXCERSIZE/SWIM SPA

CERTIFICATIONS:

ICC ES — FILE #: PMG-1629
CLASSIFIED UL — FILE #: E532606

CLIENT:

PLUNGIE USA

TITLE:

SHELL & ANCHOR DETAILS

SCALE:

AS INDICATED ON SHEET

SHEET SIZE:	DATE:	DRAWN:	CHECKED:
24"x36"	03/01/23	TDD	SEH
PROJECT NO: 2212.01	SHEET NO: S03		REVISION: 0

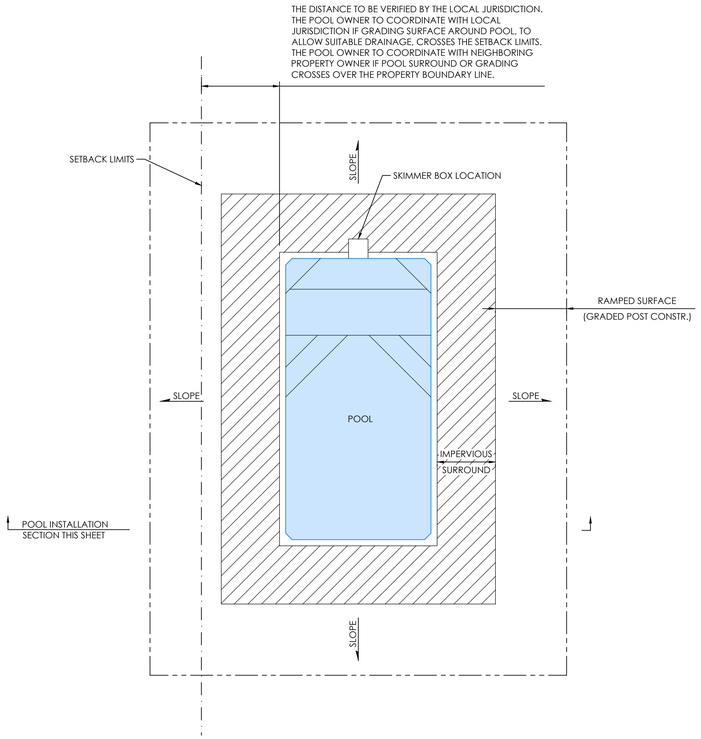

POOL INSTALLATION PLAN

SCALE: N.T.S.

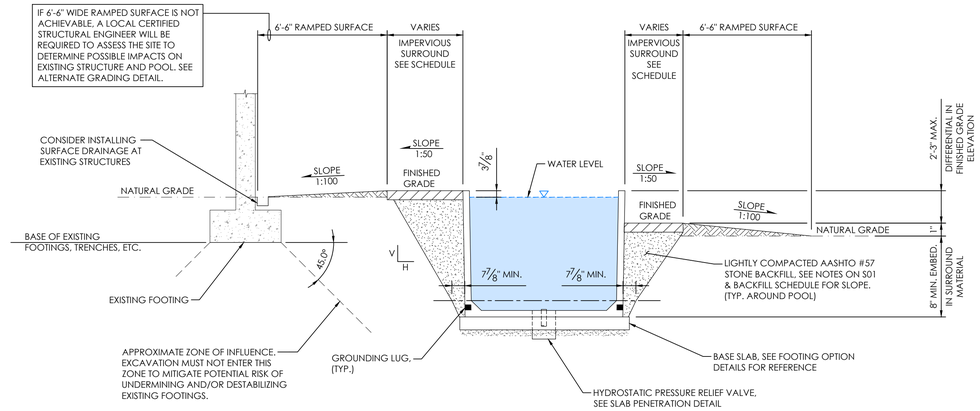

POOL INSTALLATION SECTION

SCALE: N.T.S.

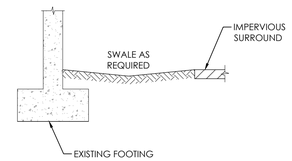

ALTERNATE GRADING DETAIL

SCALE: N.T.S.

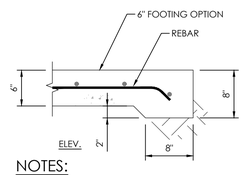

NOTES:

1. CONTRACTOR TO USE THIS OPTION WHEN INSTALLING A FOUNDATION LESS THAN 8 INCHES THICK.

THICKENED EDGE DETAIL

SCALE: 1"=1'-0"

BACKFILL DESIGN SCHEDULE

OSHA STANDARD 1926 SUBPART P APPENDIX B - SLOPING AND BENCHING	
SOIL OR ROCK TYPE	MAXIMUM ALLOWABLE SLOPES (H:V) (NOTE 2)
STABLE ROCK	VERTICAL (90°)
TYPE A (NOTE 3)	3/4:1 (53°)
TYPE B	1:1 (45°)
TYPE C	1 1/2:1 (34°)

NOTES:

1. SOIL TYPE TO BE DETERMINED FROM GEOTECHNICAL REPORT.
2. NUMBERS SHOWN IN PARENTHESES NEXT TO MAXIMUM ALLOWABLE SLOPES ARE ANGLES EXPRESSED IN DEGREES FROM HORIZONTAL. ANGLES HAVE BEEN ROUNDED OFF.
3. A SHORT-TERM MAXIMUM ALLOWABLE SLOPE OF 1/2H:1V (63 DEGREES) IS ALLOWED IN EXCAVATIONS IN TYPE A SOIL THAT ARE 12 FEET OR LESS IN DEPTH. SHORT-TERM MAXIMUM ALLOWABLE SLOPES FOR EXCAVATIONS GREATER THAN 12 FEET IN DEPTH SHALL BE 3/4H:1V (53 DEGREES).

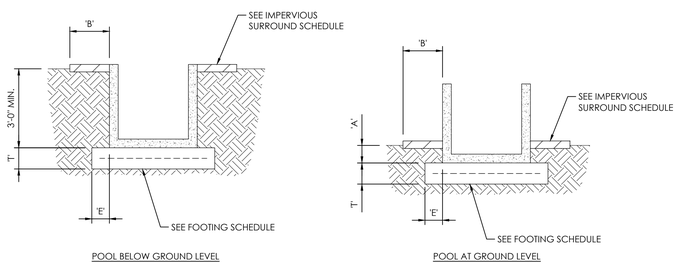

POOL LAYOUT OPTIONS (> 2000 PSF)

SEE STANDARD FOOTING & IMPERVIOUS SURROUND SCHEDULES

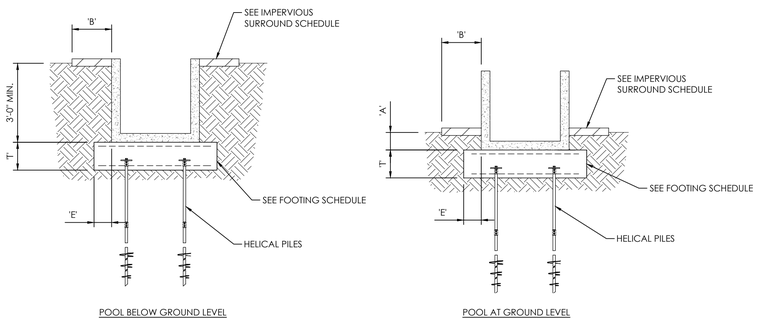

POOL LAYOUT OPTIONS (< 2000 PSF)

SEE STANDARD FOOTING & IMPERVIOUS SURROUND SCHEDULES

STANDARD FOOTING DESIGN SCHEDULE

SITE BEARING CAPACITY	POOL FOUNDATION						
	THICKNESS 'T'	TOP REINFORCEMENT	BOTTOM REINFORCEMENT	COVER	EDGE 'E'	EDGE* 'E*'	SLAB EMBEDMENT FOR POOL AT GROUND LEVEL 'A' (NOTE 2)
> 2000 PSF	6"	1 LAYER #5 AT 8" O.C. EACH WAY	N/A	3"	4"	8"	0" - 36"
< 2000 PSF	14"	1 LAYER #6 AT 8" O.C. EACH WAY	1 LAYER #6 AT 8" O.C. EACH WAY	3"	4"	8"	8" - 36"

NOTES:

1. LOCALIZED GROUND IMPROVEMENT WORKS CAN BE UNDERTAKEN TO IMPROVE THE SITE CLASS. REFER TO A CERTIFIED GEOTECHNICAL ENGINEER FOR GUIDANCE ON APPROPRIATE GROUND IMPROVEMENT WORKS AND METHODOLOGY
2. FOUNDATIONS ALWAYS REQUIRE MIN 8" EMBEDMENT INTO UNDISTURBED NATURAL MATERIAL WITH MINIMUM ALLOWABLE BEARING CAPACITY OF 2000 PSF (TO BE CONFIRMED BY A GEOTECHNICAL ENGINEER) .
3. E* DENOTES SLAB EDGE AT HYDROSTATIC VALVE PENETRATION. SEE SLAB PENETRATION DETAILS.

IMPERVIOUS SURROUND DESIGN SCHEDULE

TYPE	IMPERVIOUS SURROUND WIDTH 'B'		
	POOL BELOW GROUND LEVEL	POOL SITTING AT GROUND LEVEL	POOL ABOVE GROUND LEVEL
A OR B	MAX [36"; WIDTH OF BACKFILL ZONE + 4']	MINIMUM 36"	MINIMUM 36"
C	MAX [48"; WIDTH OF BACKFILL ZONE + 4']	MINIMUM 48"	MINIMUM 48"

NOTE: REFER TO POOL DECK NOTES ON S01

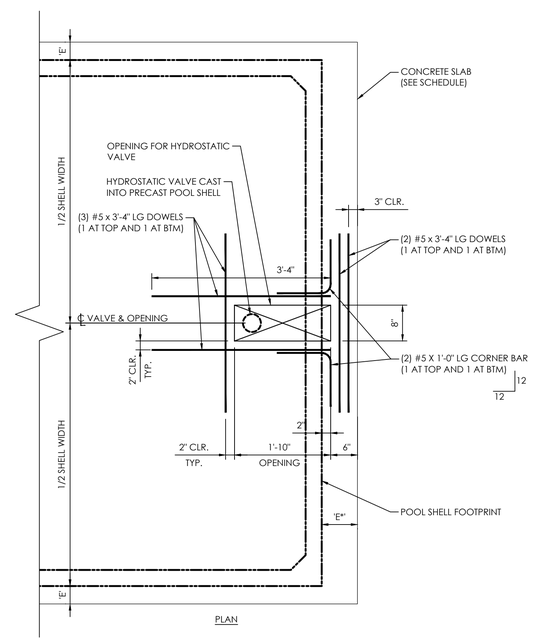

PLAN

SLAB PENETRATION DETAIL

SCALE: 3/4"=1'-0"

MANUFACTURER:

plungie®

PLUNGIE USA INC.
4400 TX STATE HIGHWAY 121, SUITE #300
LEWISVILLE, TX 75056
www.us.plungie.com

ENGINEERING CONSULTANT:

PoolCAD Engineering Group

1961 NORTHPOINT BLVD, SUITE 130
HIXSON, TN 37343
TEL: 423-843-9500
FAX: 423-843-9509

ENGINEER:

STEPHEN E. HUNT, P.E.
1961 NORTHPOINT BLVD, SUITE 130
HIXSON, TN 37343
423-843-9500

STAMP:

REV.	DESCRIPTION:	BY:	DATE:
0	CONSTRUCTION READY	JAF	03/15/23

PROJECT:

PLUNGIE MAX V2
10'-0" x 20'-0" x 5'-6½"
PRECAST CONCRETE
EXCERSIZE/SWIM SPA

CERTIFICATIONS:

ICC ES — FILE #: PMG-1629

CLASSIFIED UL — FILE #: E532606

CLIENT:

PLUNGIE USA

TITLE:

FOUNDATION OPTIONS

SCALE:

AS INDICATED ON SHEET

SHEET SIZE:	DATE:	DRAWN:	CHECKED:
24"x36"	03/01/23	TDD	SEH
PROJECT NO: 2212.01	SHEET NO: S04		REVISION: 0

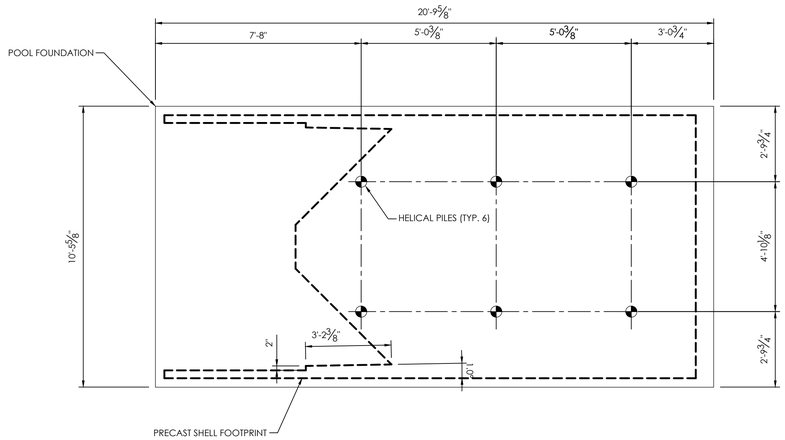

PILE PLAN
SCALE: 3/8"=1'-0"

NOTES:

1. INSTALL HELICAL ANCHORS AS DIRECTED BY FIELD ENGINEER
2. INSTALLATION EQUIPMENT SHALL NOT EXCEED 7,000 FT-LB OF TORQUE TO ENSURE ANCHORS ARE NOT OVERSTRESSED
3. THE INSTALLATION REQUIRES A RECOMMENDED TORQUE OF 4500 FT-LB.
4. CUT HELICAL TUBE TO LENGTH AS DIRECTED BY ENGINEER.
5. HOT DIP GALVANIZED IN ACCORDANCE WITH ASTM A-123 AFTER FABRICATION.

HELICORE

TENSION BOLT ADAPTOR

Applications

Patent Pending

The GeoBasics Tension Bolt Adaptor is used inside the bore of a pile, pipe or tube to provide a tensioning mechanism for applying a tension capacity to the termination device located at the outside of the pile, pipe or tube.

Helical Pile Applications:
- *plate terminations for new construction*
- *tension/compression applications*
- *underpinning brackets for remedial construction*
- *elevated walkway connections*
- *solar panel fi t up*

System Components

Tension Bolt Adaptor: Provides the connection between the threaded rod and the helical pile or pipe joint connecting bolt.

Threaded Rod: A length of 1"- 8 threaded rod (min. SAE Gr2) used between the Tension Bolt Adaptor and the termination device.

Lock Nut: A 1"- 8 hex jam nut used to lock the Tension Bolt Adaptor to the threaded rod.

Helical Pile: A foundation element consisting of a central shaft with at least one helix plate located on the shaft with its axis positioned parallel to the shaft's length. Helical piles can be used as anchors to withstand tensile loads or as deep foundations to withstand compressive loads or both simultaneously.

Pile Joint Connecting Bolt: A ¾" diameter bolt used to connect the male and female ends of adjoining helical piles or pile extensions.

Termination Device: The device at the terminating end of the construction which requires a specifi ed tension load. An example would be a plate or bracket in support of new or existing construction or for anchoring walls.

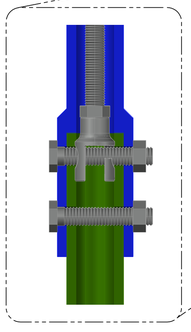

HELICORE PILE COUPLER
SCALE: N.T.S.

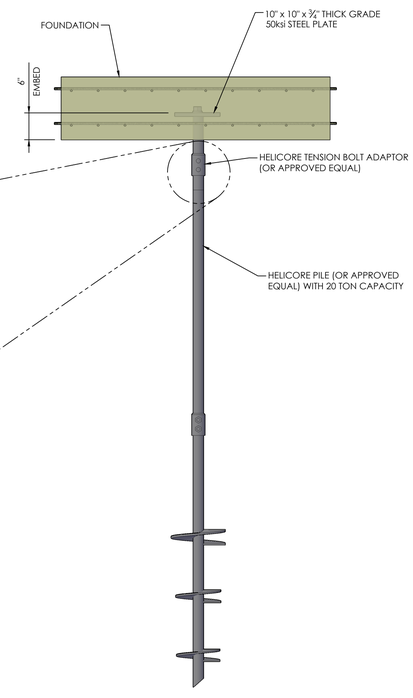

HELICAL PILE ELEVATION
SCALE: N.T.S.

MANUFACTURER:

plungie®

PLUNGIE USA INC.
4400 TX STATE HIGHWAY 121, SUITE #300
LEWISVILLE, TX 75056
www.us.plungie.com

ENGINEERING CONSULTANT:

PoolCAD Engineering Group

1961 NORTHPOINT BLVD, SUITE 130
HIXSON, TN 37343
TEL: 423-843-9500
FAX: 423-843-9509

ENGINEER:

STEPHEN E. HUNT, P.E.
1961 NORTHPOINT BLVD, SUITE 130
HIXSON, TN 37343
423-843-9500

STAMP:

STEPHEN E. HUNT REGISTERED ENGINEER NO. 115450 CERTIFICATE OF AUTHORIZATION NO. 2-6 STATE OF TENNESSEE

REV.	DESCRIPTION:	BY:	DATE:
0	CONSTRUCTION READY	JAF	03/15/23

PROJECT:

PLUNGIE MAX V2
10'-0" x 20'-0" x 5'-6½"
PRECAST CONCRETE
EXCERSIZE/SWIM SPA

CERTIFICATIONS:

ICC ES — FILE #: PMG-1629
CLASSIFIED UL — FILE #: E532606

CLIENT:

PLUNGIE USA

TITLE:

PILING PLAN & DETAILS

SCALE: AS INDICATED ON SHEET

SHEET SIZE:	DATE:	DRAWN:	CHECKED:
24"x36"	03/01/23	TDD	SEH
PROJECT NO: 2212.01	SHEET NO: S05		REVISION: 0

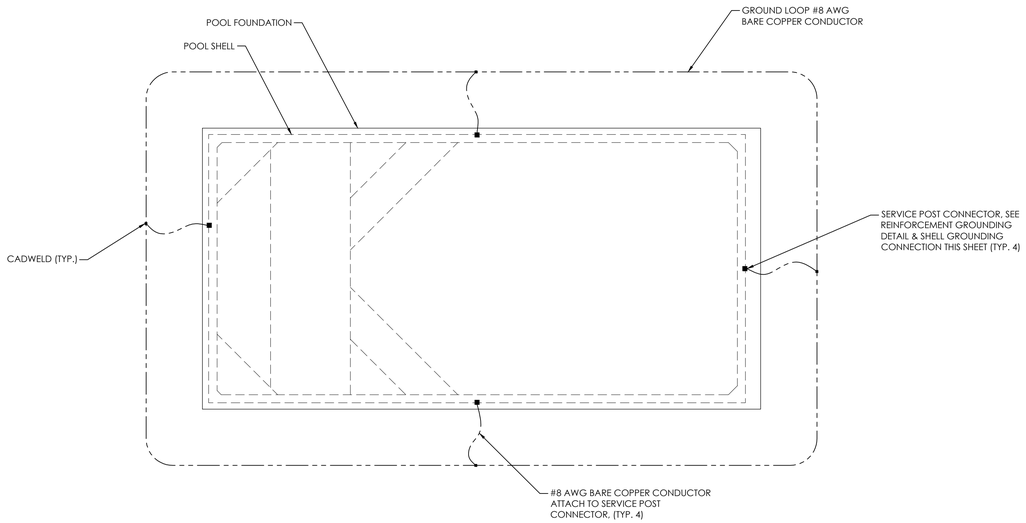

GROUNDING PLAN

SCALE: 3/8"=1'-0"

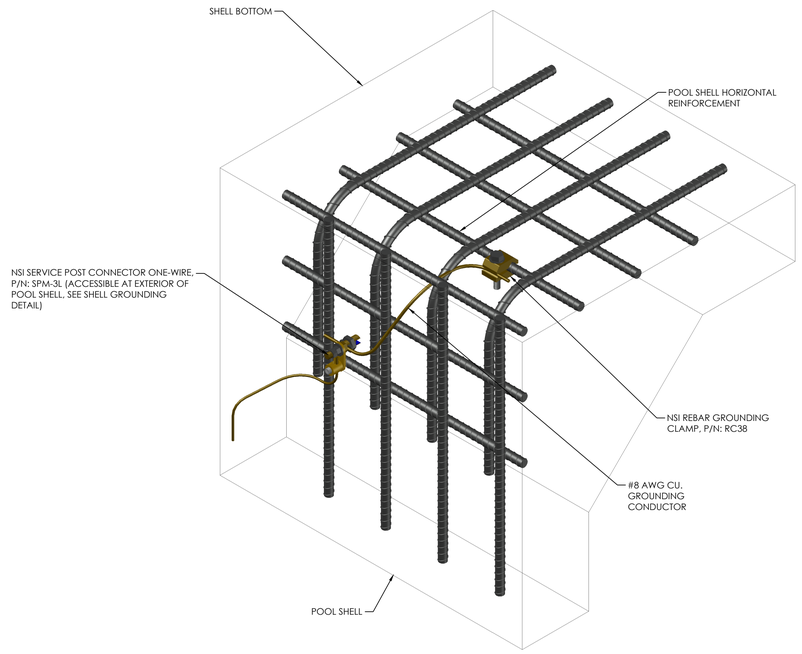

ISOMETRIC VIEW

REINFORCEMENT GROUNDING DETAIL

SCALE: 3/8"=1'-0"

GROUNDING NOTES:

EQUIPOTENTIAL BONDING GRID PER NEC 680.26(B)(2) MUST EXTEND 3' HORIZONTALLY BEYOND THE INSIDE WALLS OF THE POOL AND BE ATTACHED TO THE CONDUCIVE POOL REINFORCING STEEL AT A MINIMUM OF 4 POINTS UNIFORMLY SPACED AROUND THE PERIMETER OF THE POOL.

THE EQUIPMENT BONDING GRID MUST MEET THE FOLLOWING REQUIREMENTS:

1. #8 AWG BARE SOLID COPPER BONDING CONDUCTOR.
2. MUST FOLLOW THE CONTOUR OF THE PERIMETER SURFACE.
3. LISTED SPLICING DEVICES.
4. BONDING CONDUCTOR MUST BE 18-24 INCHES FROM THE INSIDE OF POOL WALLS.
5. BONDING CONDUCTOR MUST BE SECURED WITHIN OR UNDER THE PERIMETER SURFACE 12 INCHES BELOW SUBGRADE.
6. ALL ELECTRICAL WORK SHALL CONFORM WITH 2017 N.E.C. ARTICLE 680.

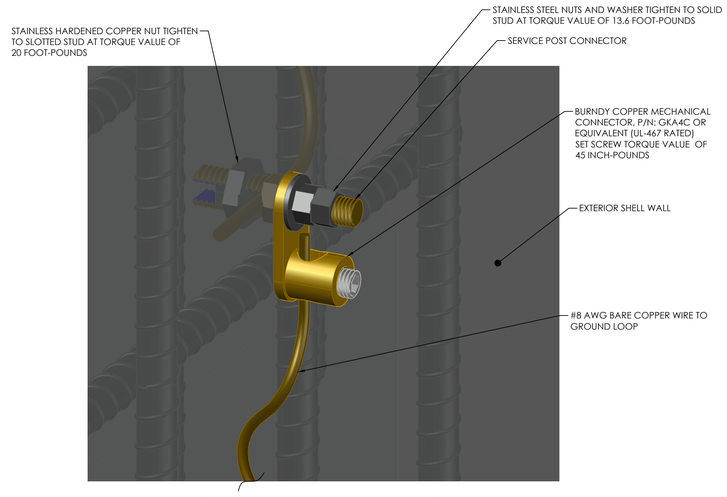

SHELL GROUNDING CONNECTION

SCALE: 1-1/2"=1'-0"

MANUFACTURER:

PLUNGIE USA INC.
4400 TX STATE HIGHWAY 121, SUITE #300
LEWISVILLE, TX 75056
www.us.plungie.com

ENGINEERING CONSULTANT:

PoolCAD Engineering Group
1961 NORTHPOINT BLVD, SUITE 130
HIXSON, TN 37343
TEL: 423-843-9500
FAX: 423-843-9509

ENGINEER:

STEPHEN E. HUNT, P.E.
1961 NORTHPOINT BLVD, SUITE 130
HIXSON, TN 37343
423-843-9500

STAMP:

STEPHEN E. HUNT REGISTERED ENGINEER NO. 115583 STATE OF TENNESSEE

REV.	DESCRIPTION:	BY:	DATE:
0	CONSTRUCTION READY	JAF	03/15/23

PROJECT:

PLUNGIE MAX V2
10'-0" x 20'-0" x 5'-6½"
PRECAST CONCRETE
EXCERSIZE/SWIM SPA

CERTIFICATIONS:

ICC ES — FILE #: PMG-1629
CLASSIFIED UL — FILE #: E532606

CLIENT:

PLUNGIE USA

TITLE:

GROUNDING DETAILS

SCALE:

AS INDICATED ON SHEET

SHEET SIZE:	DATE:	DRAWN:	CHECKED:
24"x36"	03/01/23	TDD	SEH
PROJECT NO: 2212.01	SHEET NO: S06		REVISION: 0